5G RAN (NG-RAN)

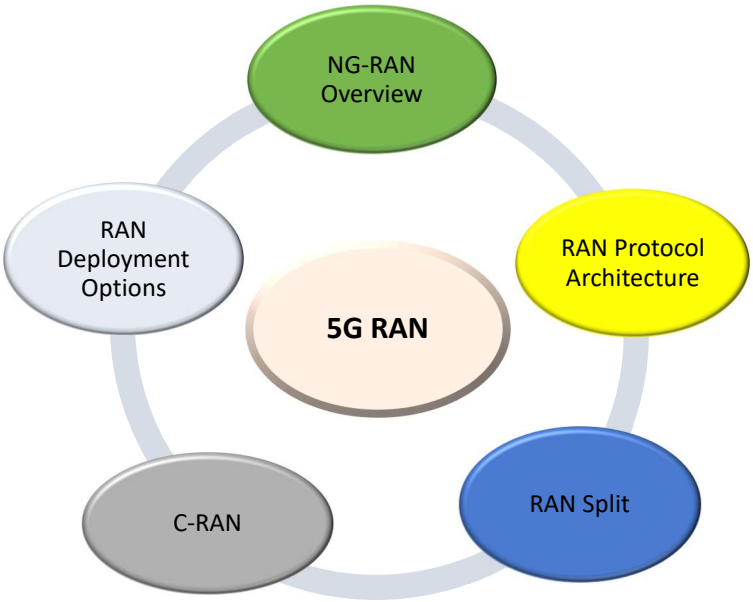
NG-RAN Overview
RAN Deployment Options
RAN Protocol Architecture
5G RAN
C-RAN
RAN Split

5G RAN

Module 1
NG-RAN Overview

5G RAN Approach

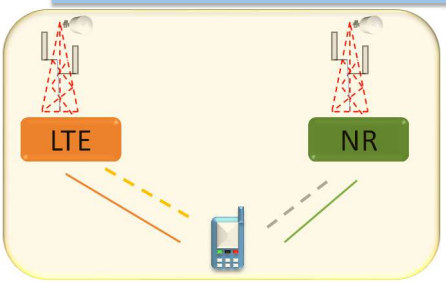

5G is evolving and many features will come in future releases to complete the 5G picture

Rel. 15 Phase 1 RAN specifications to address only eMBB with advancements towards the low-latency part of URLLC

Only NSA approach in phase 1, i.e., always with LTE as the anchor

Rel. 15 Phase 2 RAN specifications to address standalone 5G NR operations including coverage of the robustness part for URLLC

5G NG-RAN requirements

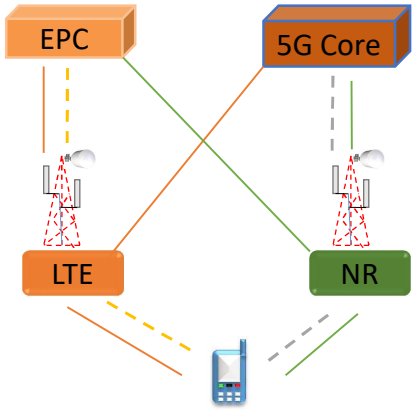

- Deployment flexibility (e.g. to host relevant RAN, Core Network (CN) and application functions close together at the edges of the network, when needed
- Allow deployments using Network Function Virtualization
- RAN-CN interfaces and RAN internal interfaces shall be open for multi-vendor interoperability
- Support Sharing of RAN between multiple operators

5G NR requirements

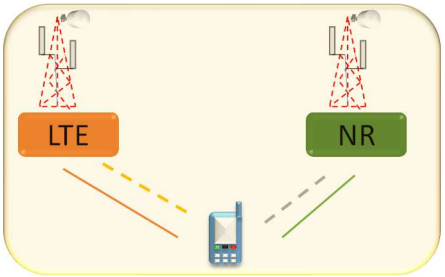

- Tight interworking between the New Radio and LTE
- At least dual connectivity between LTE and new RAT, to support high performing inter-RAT mobility and aggregation of data flows
- Multiple transmission points, either collocated or non-collocated
- Separation of control plane signaling and user plane data from different sites (C-plane/U-plane separation)
- Inter-site scheduling coordination
- Different options and flexibility for splitting the RAN architecture

5G NR - Introduction

OFDMA on DL & UL	Flexible numerology- SCFDMA possible on UL
Same SF/Frame/slot durations	Allocation can happen at granularity of OFDM symbol; aggregation of slots also possible
Same PRB structure	No change from 12 REs in frequency axis
CA & DC support	Continued.. maximum up to 16 CA as of now
Flexible TDD along with FDD	Old methods allowed along with new
Modulation	Up-to 256 QAM
Coding	LDPC & Polar codes

5G NR - Introduction

Parameters	FR1 (450MHz- 7.125MHz)	FR2 (24250MHz-52600MHz)
Access scheme	DL: CP-OFDM; UL: CP-OFDM, DFT-s-OFDM	
Carrier aggregation	Up to 16 carriers	
Bandwidth per carrier	5, 10, 15, 20, 25, 30, 40, 50, 60, 80, 90, 100 MHz	50, 100, 200, 400 MHz
Subcarrier spacing	15, 30, 60 kHz	60, 120, 240 (not for data) kHz
Max. number of subcarriers	3300 (FFT4096 mandatory)	
Modulation scheme	QPSK, 16QAM, 64QAM, 256QAM; uplink also supports π/2-BPSK (only DFT-s-OFDM)	
Radio frame length	10 ms	
Subframe duration	1 ms (alignment at symbol boundaries every 1 ms)	
MIMO scheme	Max. 2 codewords mapped to max. 8 layers in downlink and to max. 4 layers in uplink	
Duplex mode	TDD, FDD	TDD

5G NR- Better spectral utilization than LTE

Source : Nokia

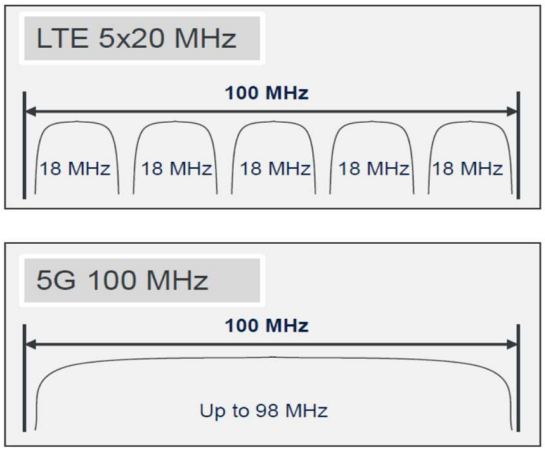

Massive MIMO

- Smaller number of antenna at client side
- Narrow beams possible due to large number of antennas

- Large no. of antennas at infrastructure side (50-100) to start with..
- Possible at very high frequencies
- Applicable for both FR1 and FR2 Bands

MU transmissions using channel information is the key

5G RAN

Module 2
RAN Protocol Architecture

5G RAN – Control Plane

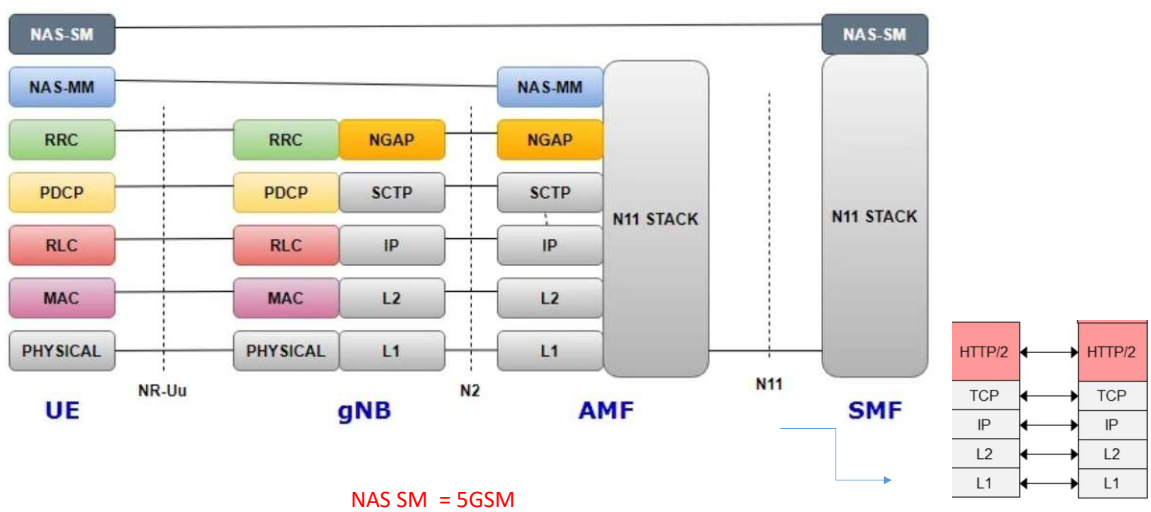

NAS SM = 5GSM
NAS MM = 5GMM

N11 Stack

gNodeB – N1/N2 Interface

5GC – RAN Signaling

N2 Protocol Stack: SCTP

N2 is using Stream Control Transmission Protocol (SCTP) on the transport layer

- Optimized for IP-based signal links
- Replaces TCP or UDP

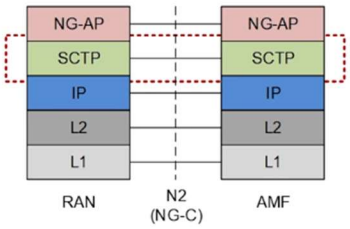

Feature	UDP	TCP	SCTP	Comment
Message based multi-streaming	✓	✗	✓	Eliminates TCP head of line blocking, via "parallelization" of message streams
Reliable, in-sequence transport	✗	✓	✓	
Congestion control	✗	✓	✓	
Multi-homing support	✗	✗	✓	Endpoint redundancy and keepalive
Redundant path support	✗	✗	✓	Link redundancy and keepalive
4-way handshake	✗	✗	✓	Protection against flooding attacks

gNodeB – N1/N2 Interface

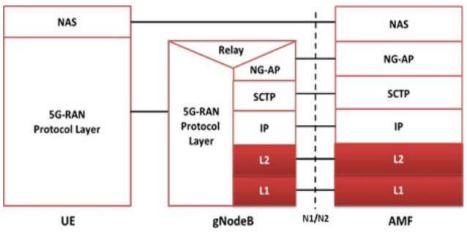

Control Plane for N1/N2 Interface

N1N2 Interface	
System Architecture for the 5G	3GPP TS 23.501
NG Application Protocol (NGAP)	3GPP TS 38.413
Non-Access-Stratum (NAS)	3GPP TS 24.501
GPRS Tunneling Protocol for Control Plane (GTPv2-C)	3GPP TS 29.274
NR and NG-RAN Overall Description	3GPP TS 28.300
SCTP	RFC 2960

- **NG Application Protocol (NGAP):** Application Layer Protocol between the gNodeB and the AMF.
- **SCTP for the control plane (SCTP):** This protocol guarantees delivery of signaling messages between AMF and gNodeB (N1N2). SCTP is defined in RFC 2960.

Source: GL Communications

gNodeB – User Plane

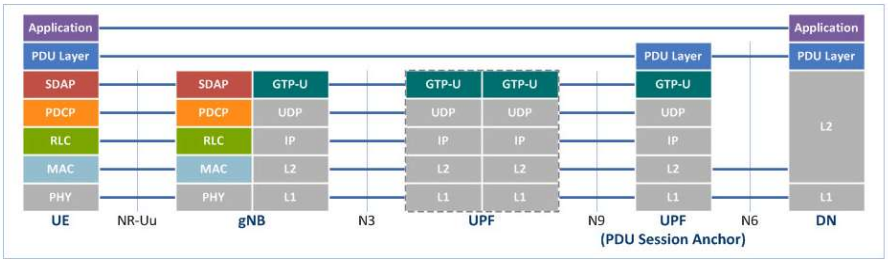

PDU Layer: IP, Ethernet, etc.

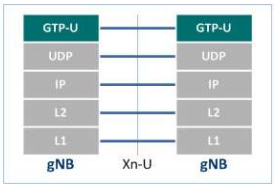

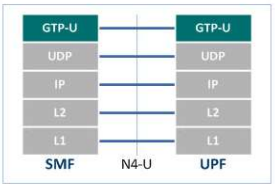

DN	: Data Network
gNB	: Next generation NodeB
GTP-U	: GPRS Tunneling Protocol User plane
MAC	: Medium Access Control
PDCP	: Packet Data Convergence Protocol
PDU	: Protocol Data Unit
RLC	: Radio Link Control
SDAP	: Service Data Adaptation Protocol
SMF	: Session Management Function
UE	: User Equipment
UPF	: User Plane Function
Xn-U	: Xn User plane

User Plane Data Handling

- NR PDCP, RLC and MAC are all new protocols but share many similarities with corresponding LTE protocols
- SDAP **(Service Data Application Protocol)** is introduced to support new flow based QoS model of the 5GC

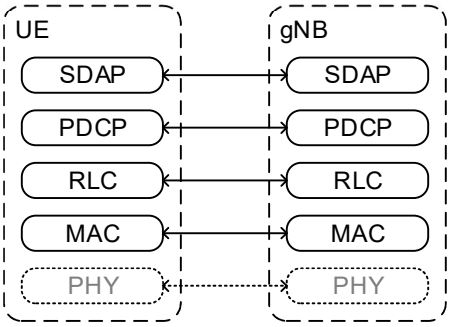

QoS Flow based markings at the core network; no concept of EPS bearer mapping to DRB; SDAP layer at gNB does mapping from QoS Flows to DRBs.. UE does the same on UL

Role of SDAP

- 5G CN and upper layers in the UE mark packets for transmission with a QoS flow identifier (QFI)
- Each QFI associated with different QoS in terms of delay, reliability, etc
- SDAP layer maps QoS flows to radio bearers, with PDCP/RLC of each RB configured appropriately for the QoS
- MAC layer gives differentiated handling (e.g. priority) to traffic from different RBs
- gNB has flexibility how to achieve the QoS

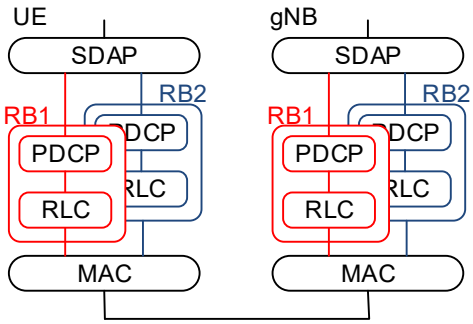

PDCP in 5G NR

- PDCP PDUs can be duplicated for transmission over 2 RLC bearer
- Motivated to enable the reliability/delay requirements for URLLC applications
- In case of carrier aggregation (CA)
  - Restrictions configured in the MAC ensure that duplicated data is transmitted via different component carriers
- In case of dual connectivity (DC)
  - RLC bearers are mapped to different cell groups (i.e. MCG and SCG)

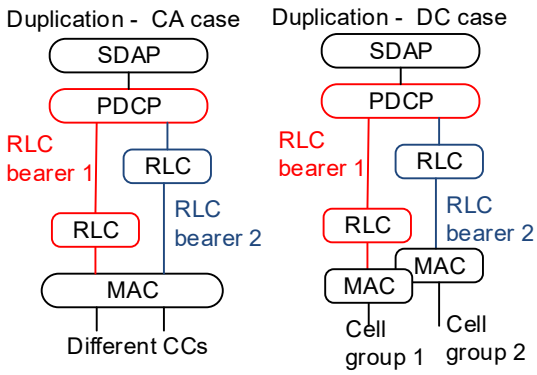

Encryption and Integrity Protection roles continue as in LTE; DRB integrity protection added; ROHC configured as needed; duplicate handling is the major new role in NR PDCP

5G RAN

Module 3
RAN Split

5G RAN Split

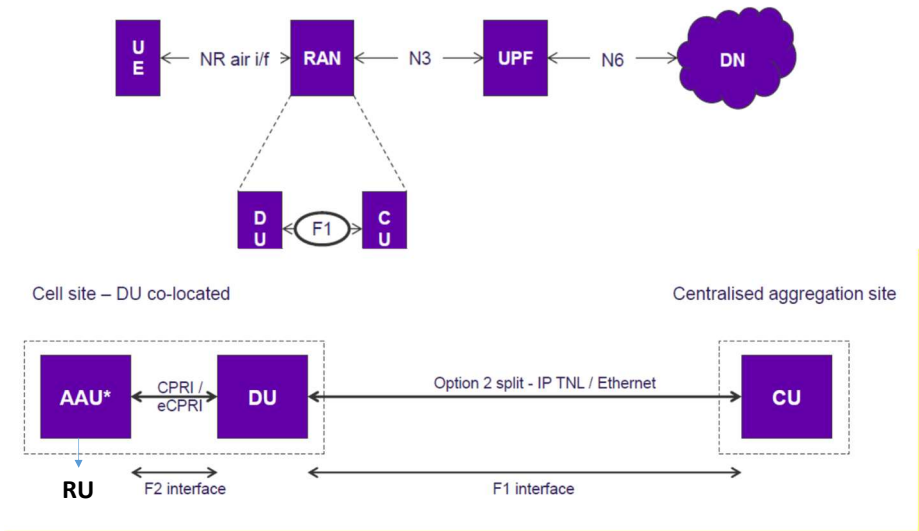

Source: IET

5G RAN Split Options

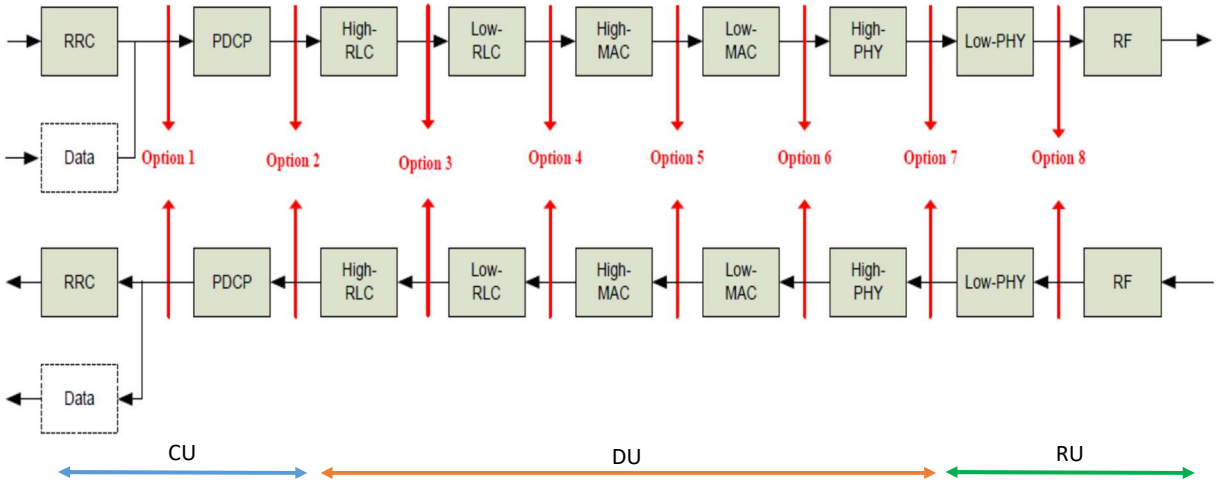

Current focus only on option 7.2

Source: 5G Americas

gNodeB – C/U Plane

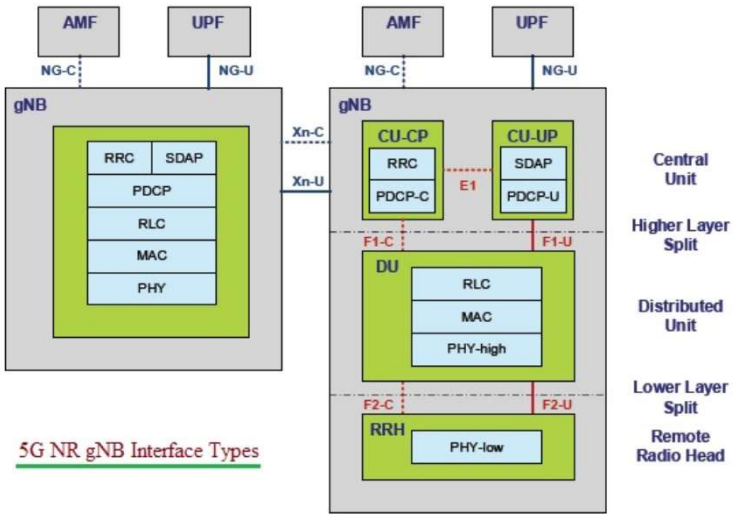

Source: rcf-wireless

gNB Control and User plane Split – Multi DU-CU

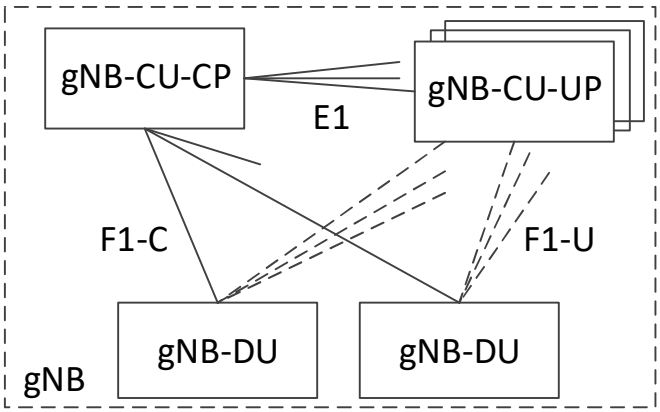

Flexibility in handling control and user plane; more flexibility in building a small cell

Each gNB-DU can in turn support multiple cells

Can mixing and matching products in the RAN work?..

Can virtualized software implementation of some RAN functions meet performance requirements?

5G RAN

Module 4
C-RAN Architecture

RAN Split in LTE Network

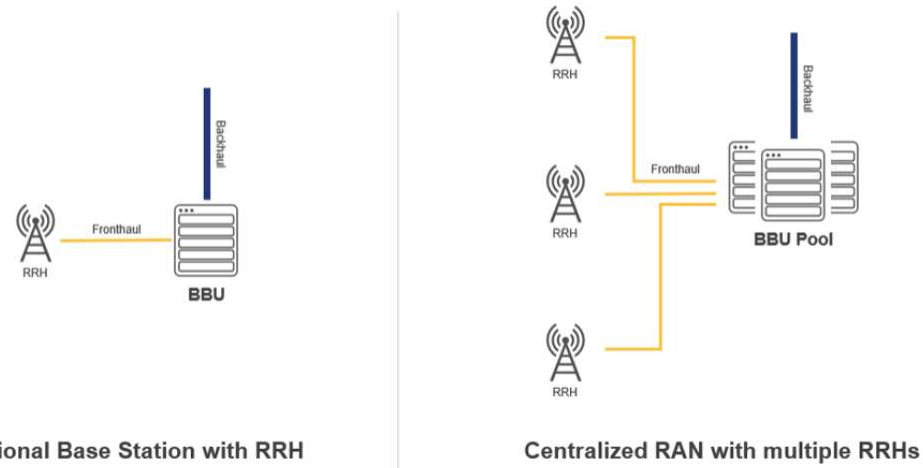

Source: Radisys

5G Macro Base station - RAN Split

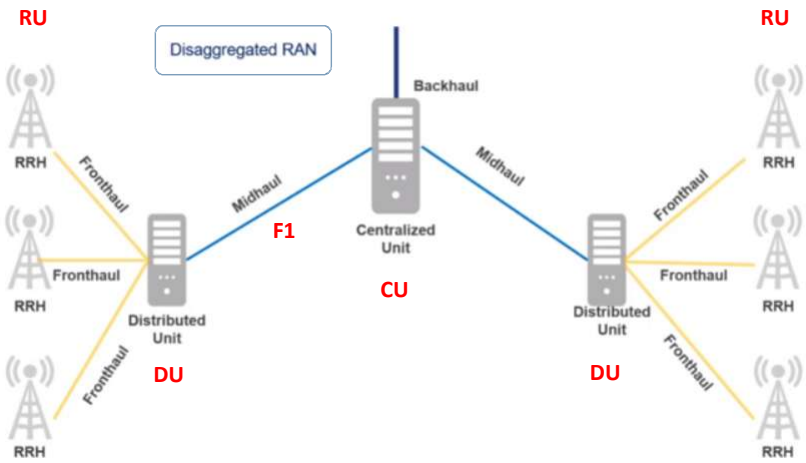

Source: Radisys

5G C-RAN Overview

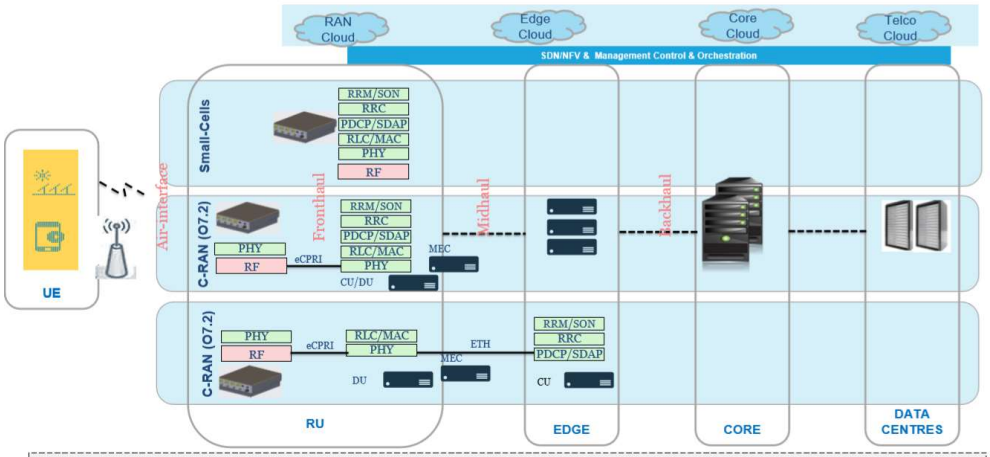

- ✓ Cloud-RAN based architecture shall meet 5G requirements of ultra-low latency and massive data throughput
- ✓ Multiple RAN Deployment options based on service requirements
  - ex: for low-latency scenarios, CU/DU can be collapsed into single node and MEC could be part of the topology
  - For eMBB case, CU and DU could be distributed across and it may be possible to have MEC entities distributed across the cloud
- ✓ Mix of small-cells, C-RAN (Option 7.2) based deployment based on 5G
- ✓ eCPRI is used for fronthaul and multiple options exist for fronthaul (OTN/PON, Ethernet)

Source: Aricent

5G Front Haul

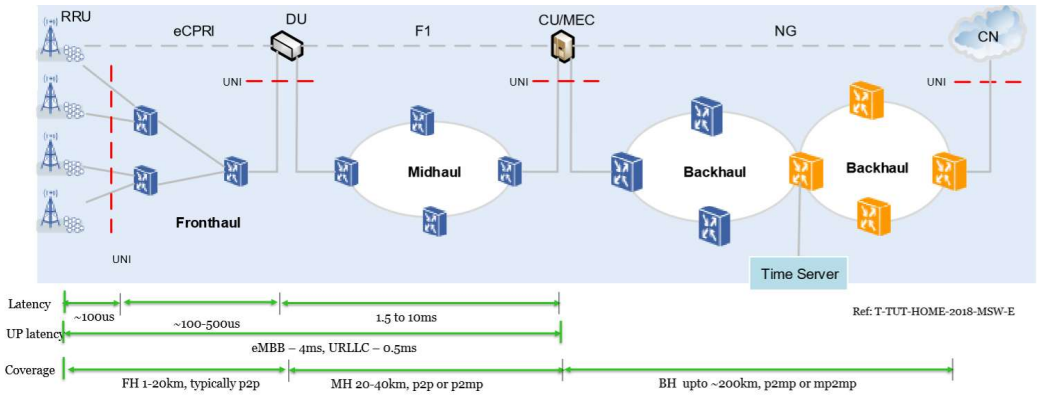

- ✓ Fronthaul – network between RU and DU
- ✓ Midhaul - network between DU and CU (F interface)
- ✓ Backhaul - network between CU and 5G NGC (and EPC)
- ✓ In case CU and DU are co-located then there shall be no midhaul. For small-cell case, there shall be backhaul only (as RU, DU and CU are collapsed into single node)

Source: Aricent

Review

1. _____ protocol layer in RAN is implemented to manage QoS

2. RAN Split enables operator to implement C-RAN architecture – True/False

3. ____ and _____ Protocol layers are implemented in CU to achieve 7.2 split?

4.mm-wave 5G NR deployment mostly suited for hotspot deployment --- True/False

5. Timeslot structure in 5G NR is fixed ---- True/False?

6. _____ is the interface between CU-C and AMF

RRC states in 5G NR

- INACTIVE → CONNECTED
  - 3-step RRC procedure
- CONNECTED → INACTIVE
  - 1-step RRC procedure
- INACTIVE → IDLE
  - 2-step RRC procedure for RNAU (request/release)
  - Autonomously by UE:
    - Upon reception of CN initiating paging
    - Upon reselecting to other RAT

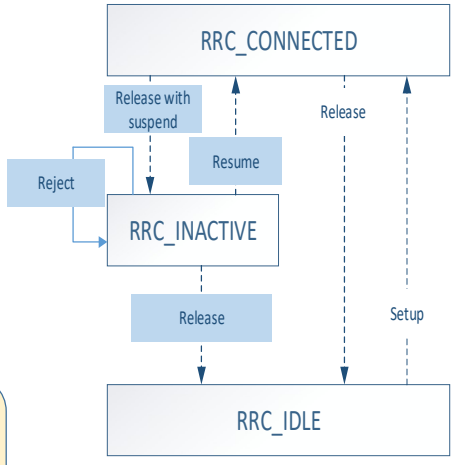

Quick and fast entry and exit to low-power state with low latency

RRC States ; Comparison

RRC_IDLE	RRC_INACTIVE	RRC_CONNECTED
UE controlled mobility based on network configuration (cell reselection)		Network controlled mobility within NR and to/from E-UTRAN
DRX configured by NAS	DRX configured by NAS or gNB	DRX configured by gNB
Broadcast of system information		Neighbour cell measurements
Paging (CN-initiated)	Paging (CN-initiated or NG-RAN-initiated)	Network can transmit and/or receive data to/from UE
UE has an CN ID that uniquely identifies it w/in a tracking area	NG-RAN knows the RNA which the UE belongs to	NG-RAN knows the cell which the UE belongs to
No RRC context stored in gNB	UE and NG RAN have the UE AS context stored, and the 5GC - NG-RAN connection (both C/U-planes) is established for UE	

5G Architecture – EN-DC

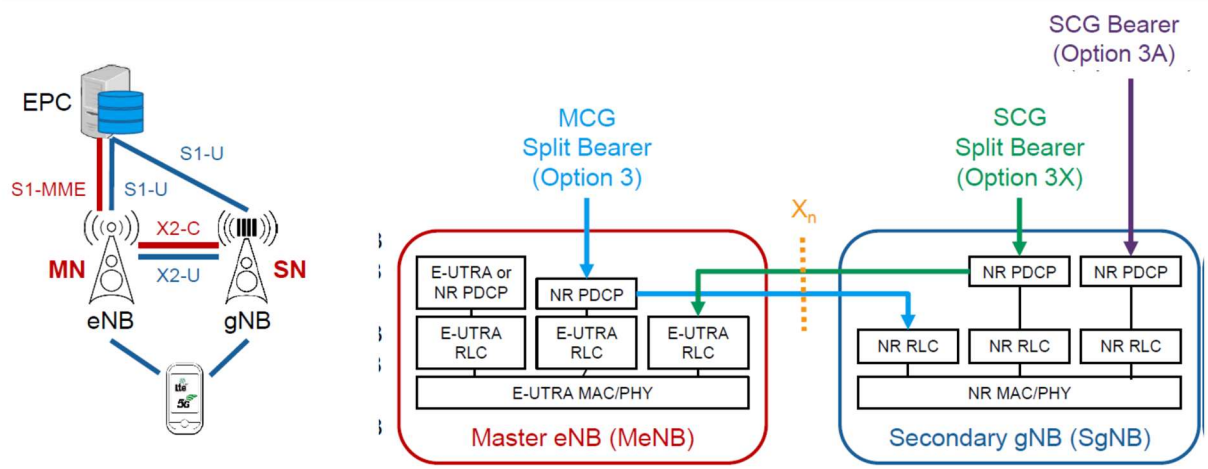

MN is LTE eNB responsible for NAS connection, handover etc.

Source: Rohde and Schwarz

Comparisons between NSA and SA Options

Consideration	Option 3X Non-Standalone	Option 2 Standalone
Solution	Dual connectivity with LTE eNB master node and NR gNB as secondary node with EPC core network	NR gNB as SA RAN with 5GC core network
Standardization	Rel-15 Dec. 2017 with June 2018 corrections	Rel-15 June 2018
LTE eNB core network interface	S1c control plane S1u user plane	n/a
NR gNB core network interface	S1u user plane	N2 control plane N3 user plane
Inter-RAT interface	X2	n/a
UE control plane	LTE RRC	NR RRC
First mobile UEs	Chipset: 2H2018 UE: 1H2019	Chipset: 2H2019 UE: 1H2020
UE peak throughput	Aggregated LTE + 5G NR (split bearer)	5G NR only
Latency	Average latency affected by packets sent on LTE path when using split bearer	Reduced when using wider sub-carrier spacings
UE Transmit power	Power shared between LTE and 5G NR unless using single Tx option	All power can be used for 5G NR
UE Coverage	Identical to existing LTE coverage	Limited by 5G NR band
Service continuity to LTE	UE always attached in LTE. With DC and split bearer, the 5G drop has less effect	Inter-RAT handover or redirection needed when 5G connection drops.
Service continuity to 2G/3G	Supported	Not supported. Service continuity from 5G to 3G will be studied for Rel-16
LTE eNB base station impact	Upgrade required to LTE eNB to support NSA mode	Minor upgrade to control plane to support inter-RAT mobility
Small cell usage	LTE+NR Dualco may be used to combine LTE macro and NR small cell	NR-NR Dualco may be used to combine NR macro and NR small cell

Source: Nokia

5G Open RAN

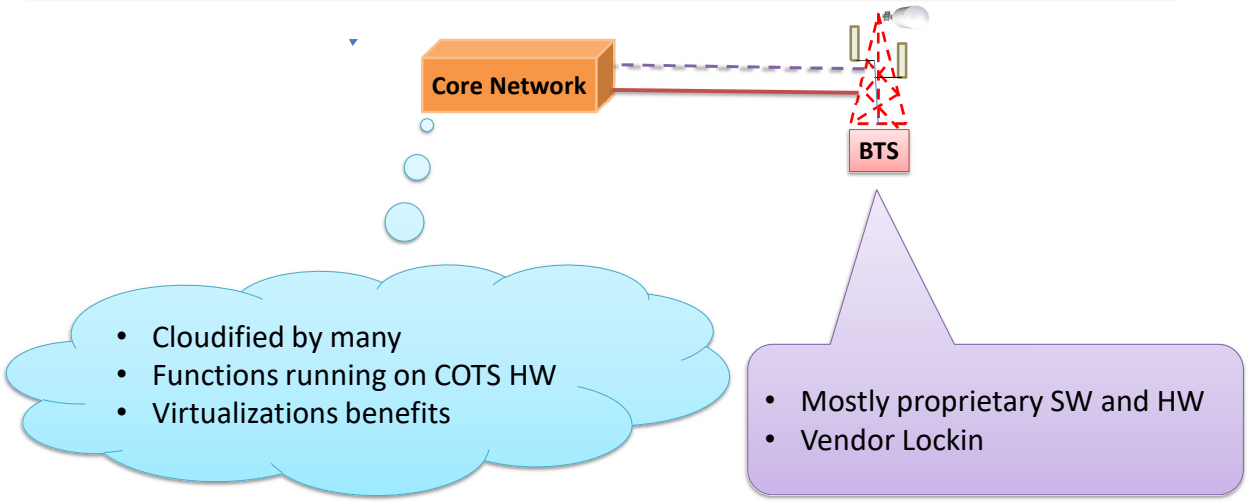

Operators want to reduce dependence on few RAN players; want to involve more players, promote innovation, reduce costs, bring advantage of virtualization to the RAN

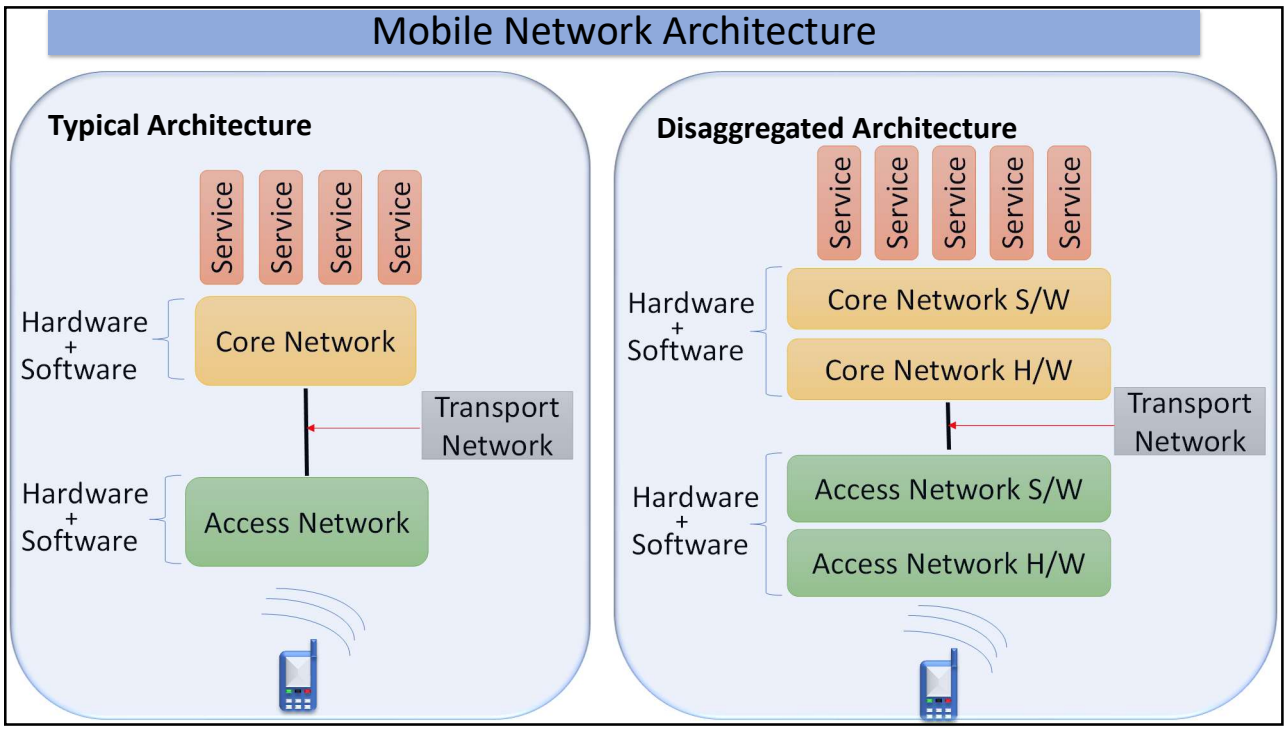
Mobile Network Architecture
Typical Architecture
Service
Service
Service
Service
Hardware + Software
Core Network
Transport Network
Hardware + Software
Access Network
Disaggregated Architecture
Service
Service
Service
Service
Service
Hardware + Software
Core Network S/W
Core Network H/W
Transport Network
Hardware + Software
Access Network S/W
Access Network H/W

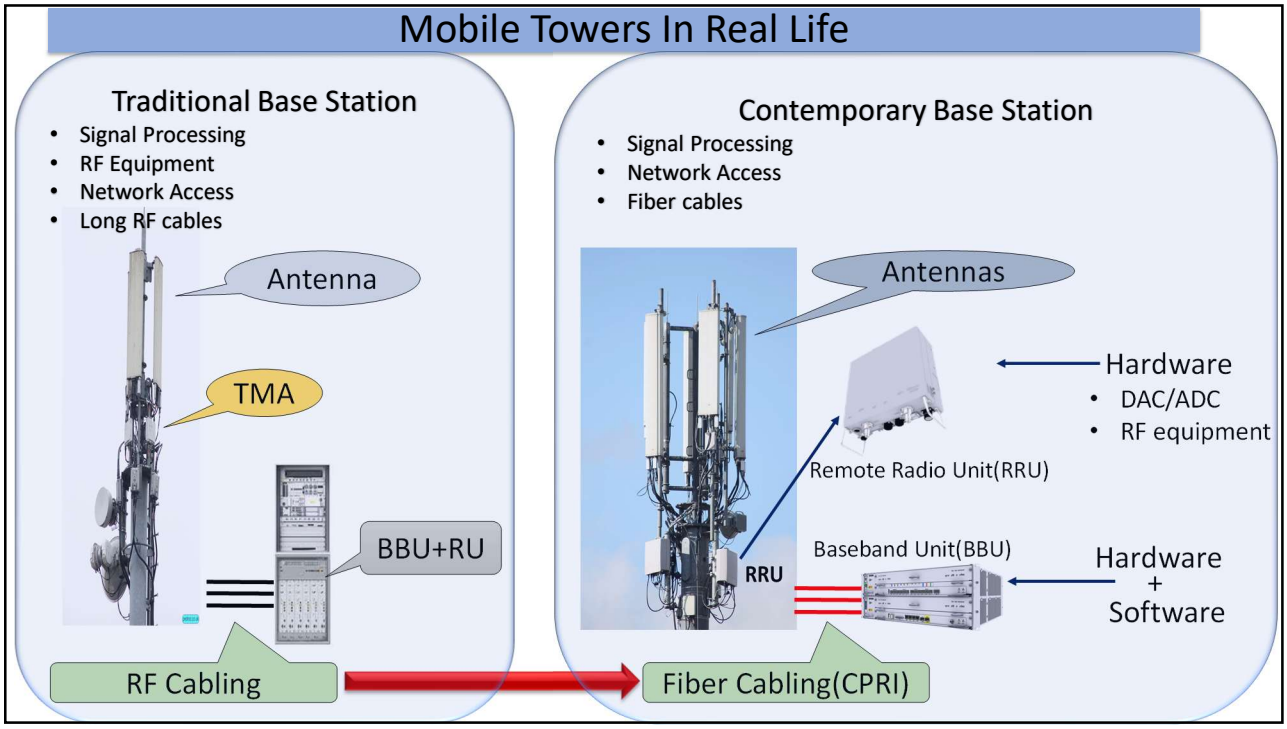
Mobile Towers In Real Life
Traditional Base Station
Signal Processing
RF Equipment
Network Access
Long RF cables
Antenna
TMA
BBU+RU
RF Cabling
Contemporary Base Station
Signal Processing
Network Access
Fiber cables
Antennas
Hardware
DAC/ADC
RF equipment
Remote Radio Unit(RRU)
RRU
Baseband Unit(BBU)
Hardware + Software
Fiber Cabling(CPRI)

Typical BTS functional Split

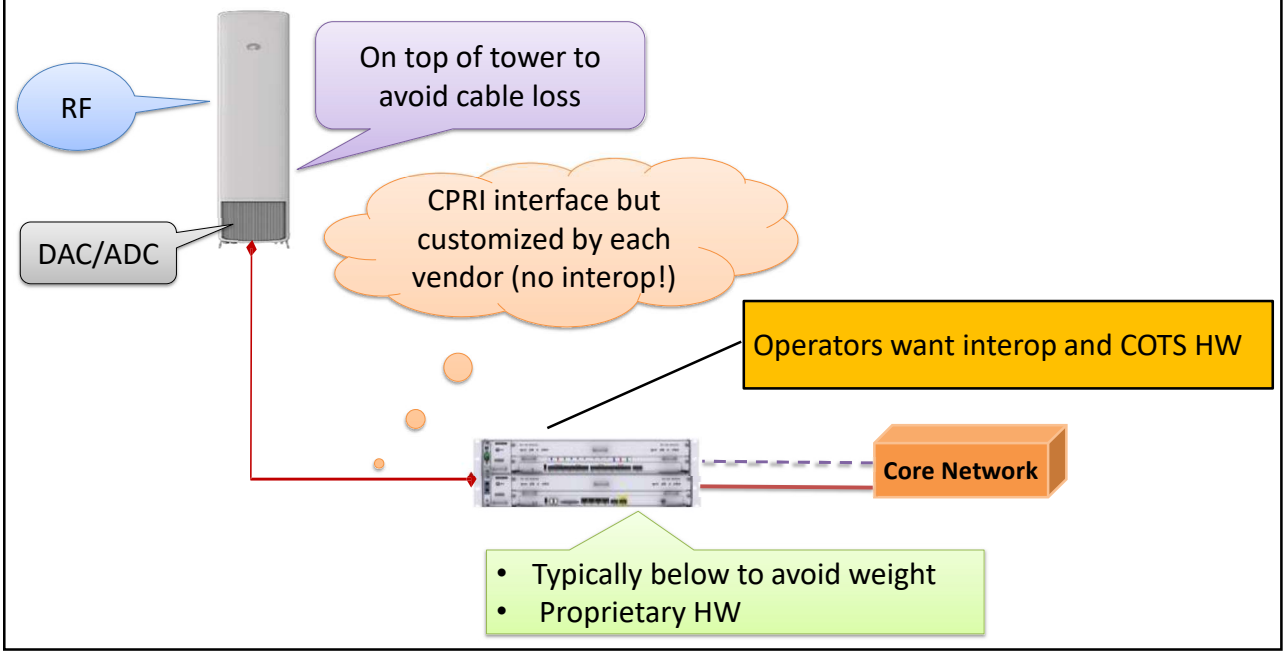

Virtualized RAN Approach

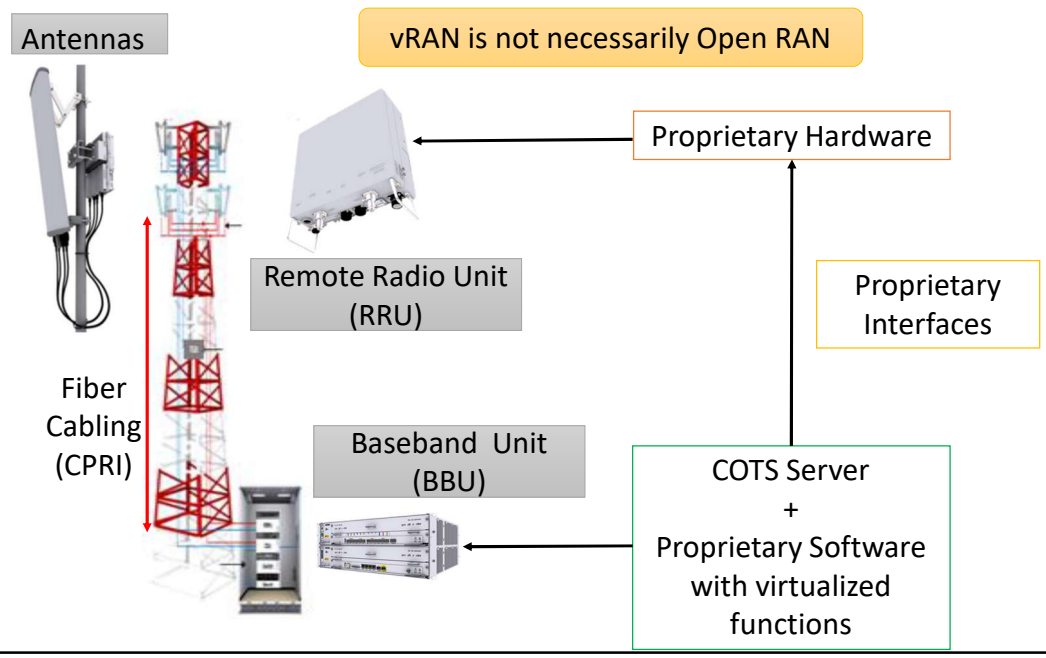

Open RAN: Disaggregating Hardware and Software

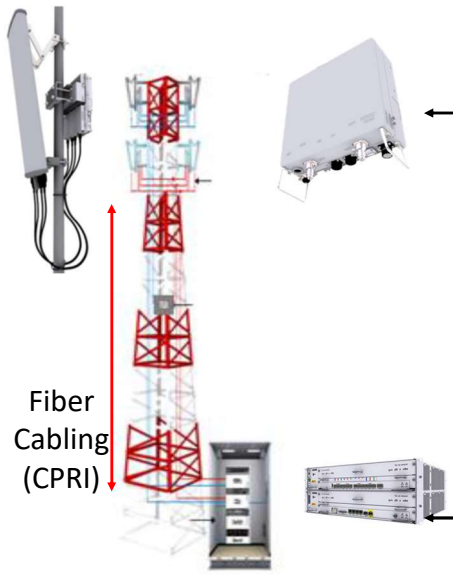

GPP based COTS Hardware (SDR)
Can be purchased from any ODM/OEM/RAN Hardware vendor

Open interface Any vendor software can work on this hardware

COTS Server
+
Proprietary Software with virtualized functions

Different Types of Network Architecture

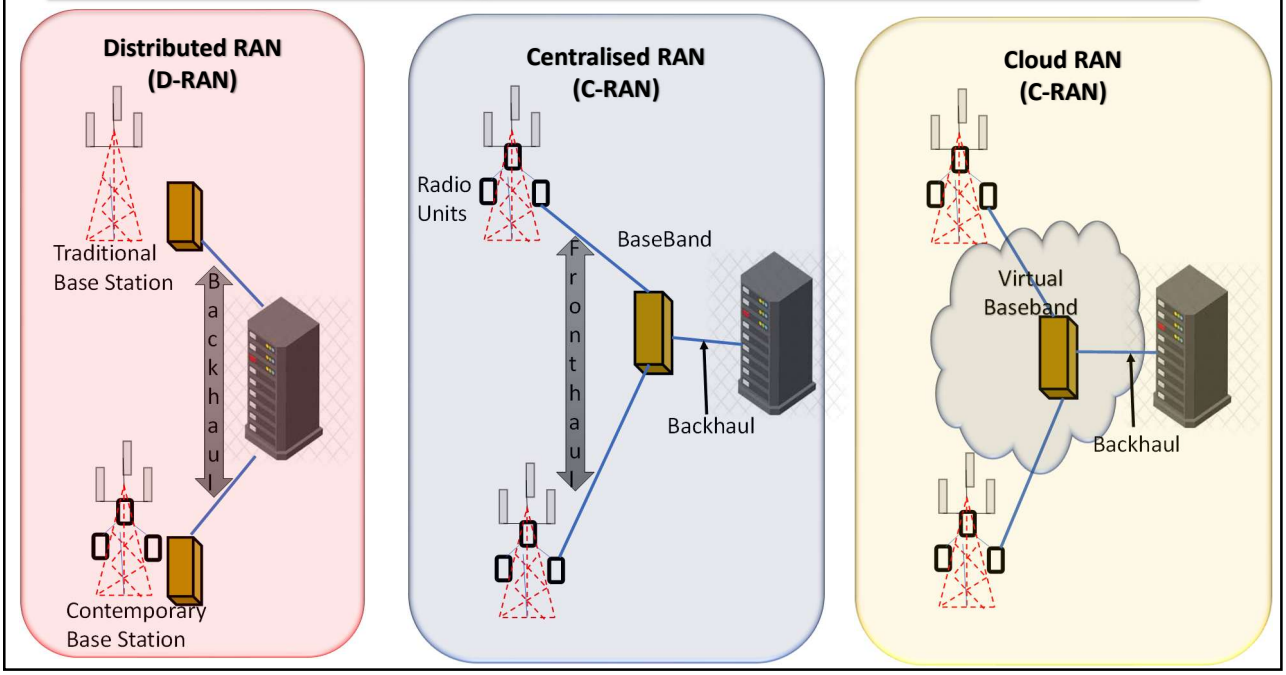

Who are involved in Open RAN?

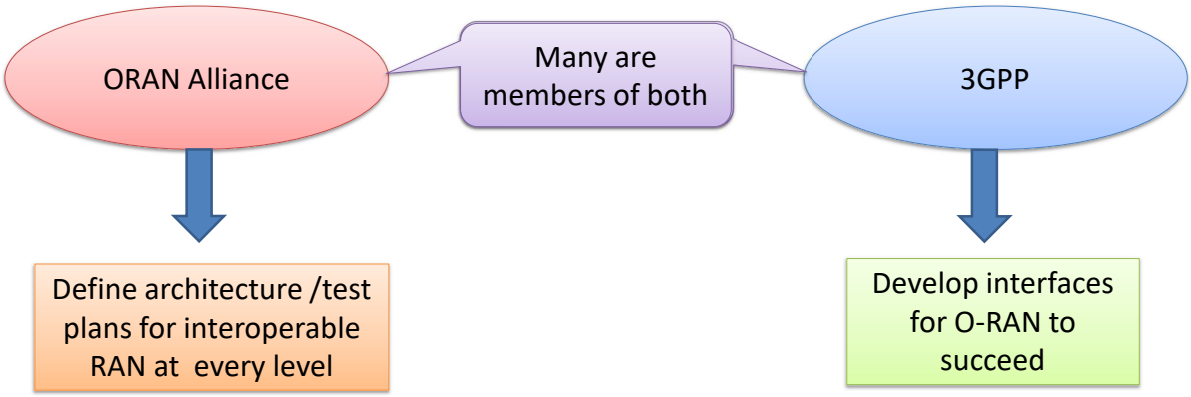

ORAN interfaces

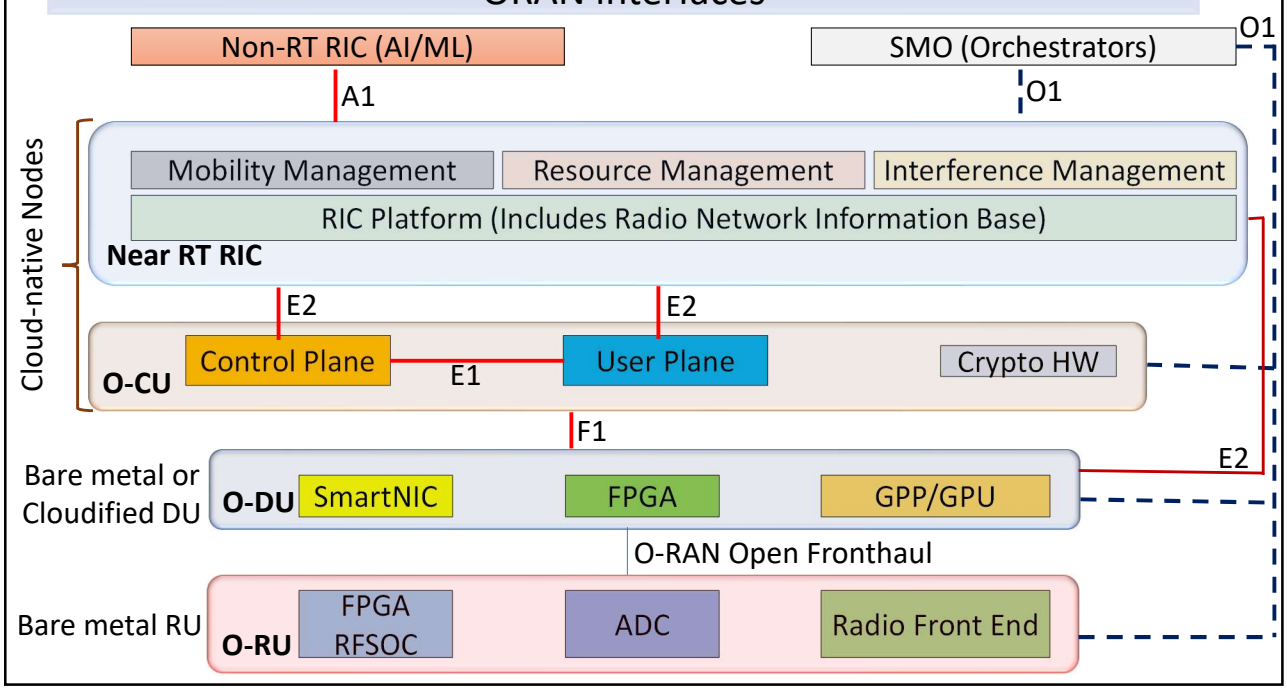

5G – 3GPP Specification

Title	Spec Series	Link	Spec Number
System Architecture for the 5G system	23 Series	https://www.3gpp.org/DynaReport/23-series.htm	23.501
Procedures for the 5G System	23 Series	https://www.3gpp.org/DynaReport/23-series.htm	23.502
Service requirements for next generation new services and markets	22 Series	https://www.3gpp.org/DynaReport/22-series.htm	22.261
Technical Specifications and Technical Reports for a 5G based 3GPP system	21 Series	https://www.3gpp.org/DynaReport/21-series.htm	21.205
Radio related specifications addressing only NR	38 Series	https://www.3gpp.org/DynaReport/38-series.htm	
Radio related specifications addressing aspects affecting both LTE and NR	37 Series	https://www.3gpp.org/DynaReport/37-series.htm	
NR; NR and NG-RAN Overall Description	38 Series	https://www.3gpp.org/DynaReport/38-series.htm	38.300
NR; Multi-connectivity; Overall description	37 Series	https://www.3gpp.org/DynaReport/37-series.htm	38.340
NG-RAN; Architecture description	38 Series	https://www.3gpp.org/DynaReport/38-series.htm	38.401

Review

1. Which layer in the 5G radio stack is likely to be in the CU ?.
2. Can the CU and DU technically come from different vendors?
3. Why is there an interest in cloud RAN ideas?
4. Will all 5G implementations meet the IMT 2020 requirements?
5. Will TDD or FDD have more challenges in meeting latency targets?
6. Will the fronthaul requirements in an ORAN solution be dependent on the number of MIMO layers supported?
7. Why is there a difference between the UP and CP latency numbers?